Lifting Solutions Group
Axel Johnson International

Super Terminator Wedge Socket Crosby S-423TB

Product information



Wedge socket assembly with safety bolt, nut and cotter pin.
Assembly includes socket, wedge, pin, wireropeclip, tensioner bolts and secondary retention wire.

The patented wedge socket termination solution is specifically designed to be used with high performance wire ropes. The wedge socket termination gives, together with most wire ropes, a remaining strength of 80% of the wire rope's minimum breaking load. The wire rope end is secured with a wire clamp against the wedge, this prevents the wedge to come loose or be knocked out.

Features:

- The 423T wedge socket terminations have a minimum efficiency rating on most high performance, high strength, compacted strand, rotation resistant wire ropes of 80% based on the catalog breaking strength of the various ropes.
- Design eliminates the difficulty of properly seating the wedge with high performance wire rope into a wedge socket termination.
- Proper application of the Super TERMINATOR eliminates the “first load” requirement of conventional wedge socket terminations.
- Wedge and accessories provided with a zinc finish.
- Basket is cast steel and individually magnetic particle inspected.
- Pin diameter and jaw opening allows wedge and socket to be used in conjunction with closed swage and spelter sockets.
- Secures the tail or “dead end” of the wire rope to the wedge, thus eliminates loss or “punch out” of the wedge.
- Eliminates the need for an extra piece of rope, and is easily installed.
- The wedge eliminates the potential breaking off of the tail due to fatigue.
- The tail, which is secured by the base of the clip and the tension device, is left undeformed and available for re-use.

... *Read more*

Material: Cast Steel
Marking: According to standard
Standard: EN 13411-6

© November 2026 - All Rights Reserved

Lifting Solutions Group
Axel Johnson International

Super Terminator Wedge Socket Crosby S-423TB

Blueprint

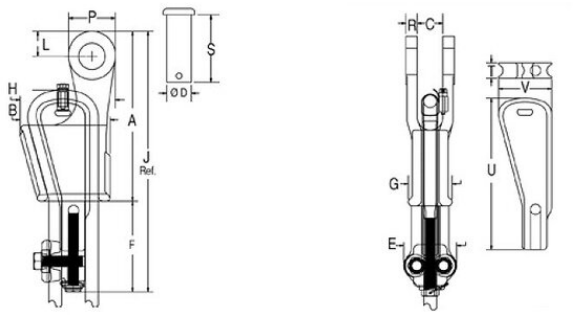

Technical data

Part code	Rope Ø range mm	Finish	A mm	B mm	C mm	D mm	E mm	F mm	G mm	H mm	J mm	L mm	P mm	R mm	S mm	T mm	U mm	V mm	Weight kg
121501600125	14-16	Painted	210	114	31,8	30,2	76,2	103	54,1	117	313	31	57,2	14,2	82,6	19,1	175	66	5.9
121501900125	18-19	Painted	251	132	38,1	35,1	82,6	122	62,0	136	373	35,6	66,5	16,8	92,2	22,4	194	76.7	8.7
121502200125	20-22	Painted	286	149	44,5	41,4	96,8	146	68,3	156	431	42,4	79,5	19,1	109	25,4	241	88.1	12.6
121502600125	24-26	Painted	325	167	50,8	50,8	96,8	146	74,7	179	471	51,1	95,3	22,4	119	28,7	264	97	16.9
121502800125	28	Painted	365	176	57,2	57,2	102	174	85,9	198	539	57,4	108	25,4	138	31,8	300	107	25.9
121503200125	30-32	Painted	415	219	66,5	63,5	114	197	90,7	238	612	59,4	114	26,9	168	35,1	352	148	39.9

© November 2026 - All Rights Reserved