Lifting Solutions Group
Axel Johnson International

Wireless Compression Load Cell - LoadSafe

Product information

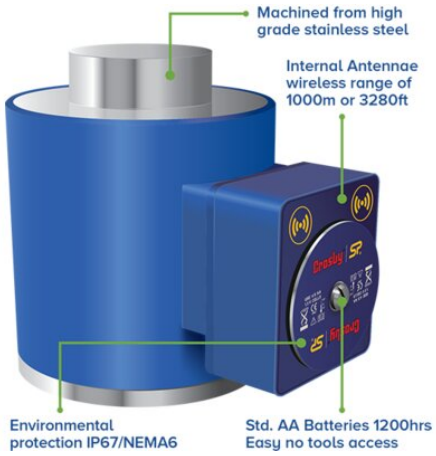

The Straightpoint Wireless Compression LoadSafe (WNI). No longer hindered by troublesome and hard to maintain cables, large scale projects can be completed in a fraction of time previously required. Multiple compression loadcells can all connect wirelessly to our range of PC software via a USB dongle, to our iOS and Android app or to our SW-HHP wireless handheld display.

Maintenance and repair costs are all but eliminated due to the absence of cables and connectors, and the product's flexibility opens the door to a large number of applications in the heavy lift, energy, defence, rigging, shipping, and general transportation sectors.

Features

- Proprietary 2.4 GHz Wireless or Bluetooth options
- Accuracy of 0.1% FS
- Environmentally sealed to IP67/NEMA 6
- Stocked capacities up to 500t
- Industry leading wireless range up to 1000m or 3280ft
- Internal antennae
- ATEX & IECEx version for hazardous area zones 0, 1 & 2 available
- Battery life of 1200hrs
- Compact size
- Remote on-off

Supplied with the following as standard

- AA Batteries
- Proof test certificate
- Operator Manual

... *Read more*

Material: 17-4PH H900 Stainless Steel. Aluminium Jacket 6000 series
Temperature range: -10°C up to +50°C
Finish: Stainless Steel – Polished. Jacket Blue Anodized to BS EN 12373-1:2001 Class 10.

Safety factor: 3:1

© November 2026 - All Rights Reserved

Lifting Solutions Group
Axel Johnson International

Wireless Compression Load Cell - LoadSafe

Blueprint

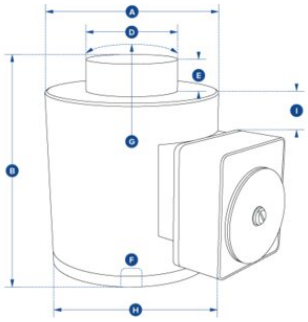

Technical data

Part code	Code	WLL ton	ØA mm	B mm	Ø D mm	E mm	F mm	G mm	H mm	I mm	Weight kg
423500500260	WNI5TC	5	100	127	59	16	M18 x 2.5	152	158	22	6.2
423501000260	WNI10TC	10	100	127	59	16	M18 x 2.5	152	158	22	6.2
423502500260	WNI25TC	25	100	127	59	16	M18 x 2.5	152	158	22	6.2
423505000260	WNI50TC	50	100	127	59	16	M20 x 2.5	152	158	22	6.2
423510000260	WNI100TC	100	152	184	80	26	M20 x 2.5	432	208	33	15.5
423515000260	WNI150TC	150	152	184	80	26	M20 x 2.5	432	208	33	15.5
423530000260	WNI300TC	300	185	300	155	27.5	M20 x 2.5	432	241	49	65
423550000260	WNI500TC	500	185	300	155	27.5	M20 x 2.5	432	241	49	65
423510000261	WNI1000TC	1,000	362	310	270	40	M30 x 3.5	950	422	102	172

© November 2026 - All Rights Reserved